MERCRUISER (WO4CTA (150 HP) HINO 234 I/L4)
Serial Nbr Range: ALL ()

PARTIAL ENGINE

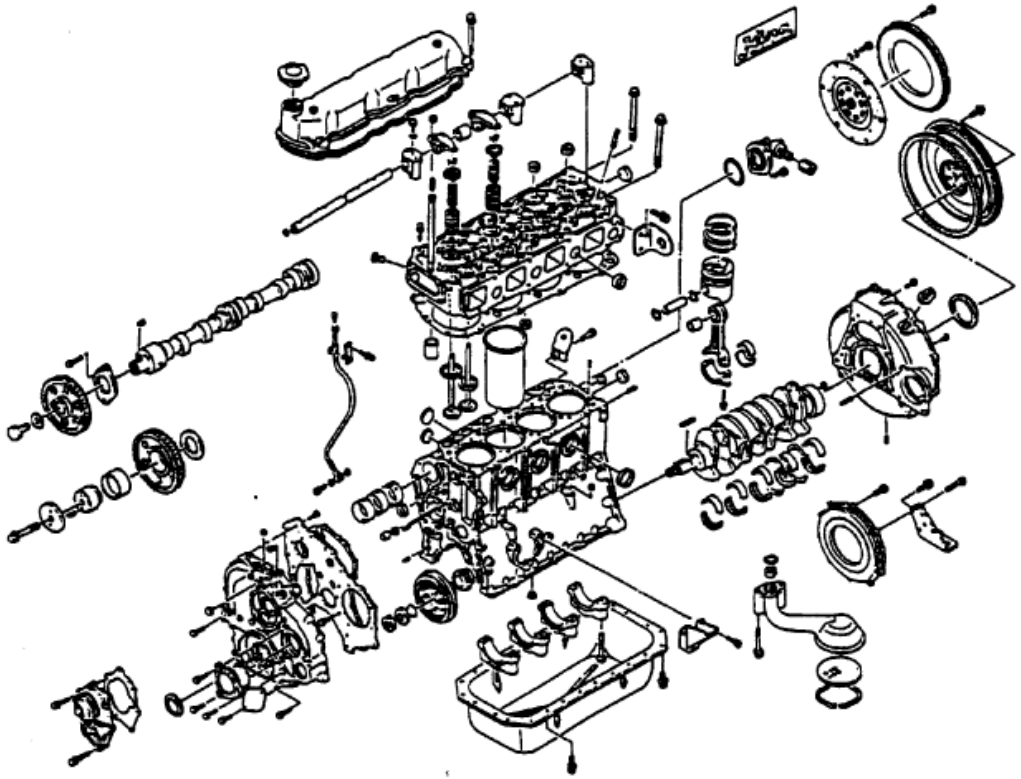

Parts List

Ref	Class	Part	Description	Qty	Comment	Footnote
1		830905400	ENGINE ASSEMBLY - PARTIAL	1		